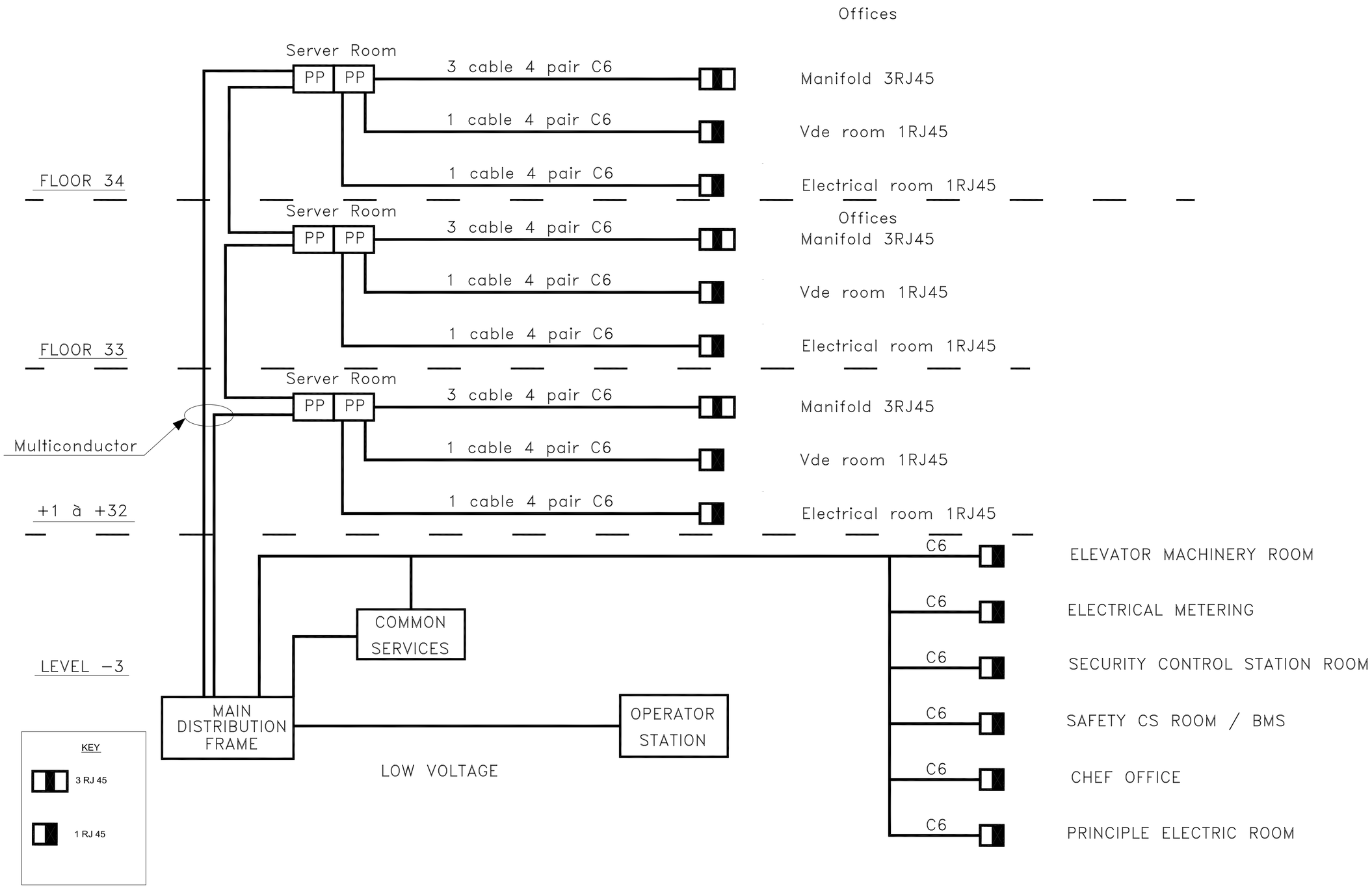

GENERAL NOTES

1. Do not scale, dimension govern.
2. All dimensions are in millimeters unless noted otherwise.
3. All dimensions must be checked on site before construction.
4. Architect shoud be in written notified of any disagreement.

All measure and quantity indications on this plan must be checked by the respective contractor before execution; any discrepancies in the documents, tolerance, deviation or other disagreement of any kind must be clarified **in writing** with the architect, the local contractor, and construction management.
This plan is valid only in conjunction with the text for invitation of tenders including all preliminary remarks, structural engineering plans, domestic technique plans, and expert reports.
Only the indications of measurements in the plans are binding.
The British Standard (BS), llegal and technical local prescriptions at the time of execution are effective.
The fasteners shown in the details are not to scale. The necessary strength category and the materials' quality category of all the fasteners must be evaluated by the executing contractor according to the respective statics requirements.

No.	Date	Description

Key Plan

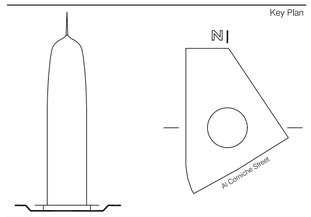

Client
H.E. Sheikh Saud Al -Thani
P.O. Box 7863 Doha, Qatar
Tel: +974 485 9705 Fax: +974 436 1531

Architect
ATELIERS JEAN NOUVEL
10, Cité d'Angoulême 75011 Paris , France
Tel: +33 (0) 1 49 23 83 83 Fax: +33 (0) 1 43 14 81 10

Structural and M&E Consultant
TERRELL INTERNATIONAL
11, rue Heinrich 92772 Boulogne-Billancourt cedex, France
Tel: +33 (0) 1 46 21 07 46 Fax: +33 (0) 1 46 21 03 48

Local Architect
ARAB ENGINEERING BUREAU
Post Box 1148, Doha, Qatar
Tel: +974 477 969 Fax: +974 477 888

Facade Consultant
BCS S.A.
Rue Prieur 1, 2036 Cormondrèche, Switzerland
Tel: +41 32 732 98 00 Fax: +41 32 732 98 01

Security Consultant
SOCOTEC INTERNATIONAL
1, avenue du Parc, 78180 Montigny-le-Bretoneux, France
Tel: +33 (0) 1 30 12 85 00 Fax: +33 (0) 1 30 12 86 70

Quantities Surveyor
EUROPTIMA
8, rue Bayen, 75017 Paris, France
Tel: +33 (0) 1 44 29 27 30 Fax: +33 (0) 1 44 29 27 31

Acoustics Consultant
AVEL ACOUSTIQUE
43, rue des Moulins des Prés 75013 Paris, France
Tel: +33 (0) 1 45 88 89 92 Fax: +33 (0) 1 45 88 90 38

Landscape Consultant
HARDY Ingénieurs et Paysages
3, avenue de Saint Cloud 78000 Versailles, France
Tel: +33 (0) 1 39 50 50 58 Fax: +33 (0) 1 30 21 42 51

Parking Consultant
J.-P. MOLE S.A.
8, rue Denis Poisson 75017 Paris, France
Tel: +33 (0) 1 56 68 00 90 Fax: +33 (0) 1 56 68 03 20

Kitchen Consultant
PLURICONSULT
4, avenue de la Mairie, 94260 Fresnes, France
Tel. +33 (0) 1 46 66 47 19

Surveyor
MTC SURVEYS
P.O. Box 22103 Doha , Qatar
Tel: +974 4654414 - +974 4654415 Fax: +974 4654405

High Rise Office Building
DOHA - STATE OF QATAR

Phase
DETAIL DESIGN
PRODUCTION INFORMATION / BILLS OF QUANTITIES

Title
LOW CURRENT TELEPHONE AND COMPUTER DIAGRAM

Job	Cad ref.	Date	Revision
541	LC-002	31.05.2003	-

Format	Scale	Level / Zone	Sheet
A2		FFL	LC 002